DocuSign Envelope ID: E3C4498E-8A8F-46EE-B67D-513539FC73DD

PROJECT REFERENCE NO.	SHEET NO.
17BP.14.R.118	2C-5

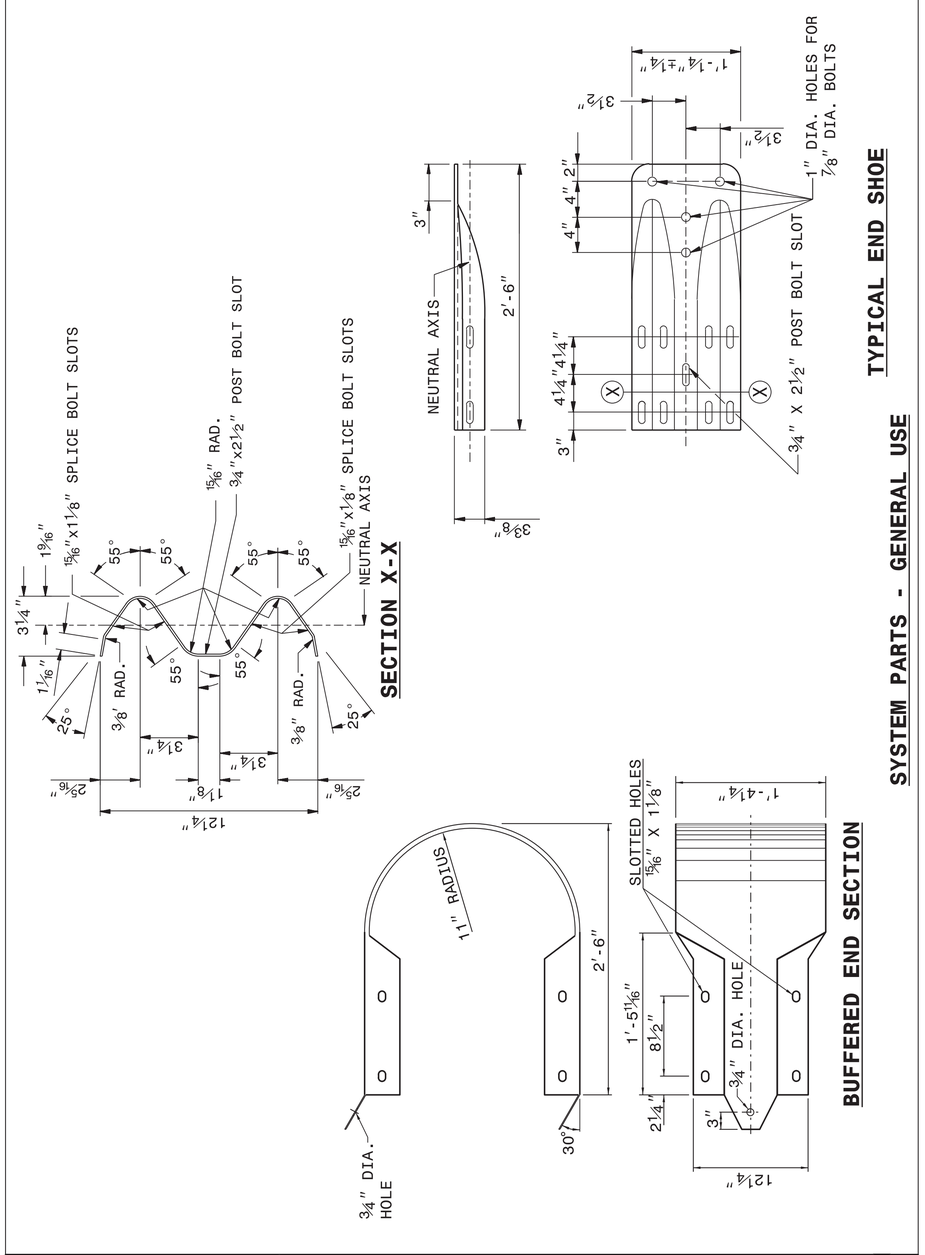

STATE OF NORTH CAROLINA DEPT. OF TRANSPORTATION DIVISION OF HIGHWAYS RALEIGH, N.C.

ROADWAY DETAIL DRAWING FOR **GUARDRAIL INSTALLATION**

SHEET 8 OF 8 **862D02**

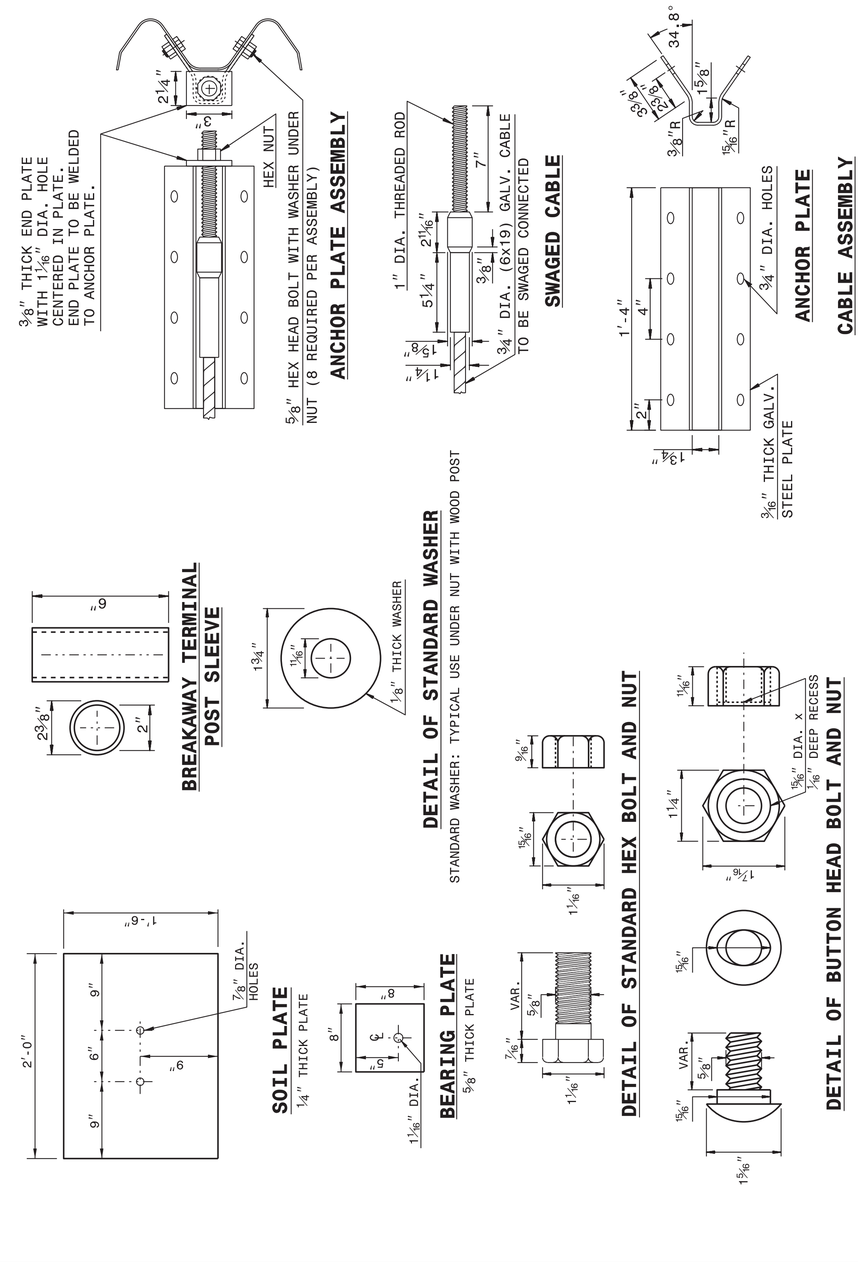

STATE OF NORTH CAROLINA DEPT. OF TRANSPORTATION DIVISION OF HIGHWAYS RALEIGH, N.C.

ROADWAY DETAIL DRAWING FOR **GUARDRAIL INSTALLATION**

SHEET 7 OF 8 **862D02**

STATE OF NORTH CAROLINA DEPT. OF TRANSPORTATION DIVISION OF HIGHWAYS RALEIGH, N.C.

ROADWAY DETAIL DRAWING FOR **GUARDRAIL INSTALLATION**

SHEET 8 OF 8 **862D02**

DOCUMENT NOT CONSIDERED FINAL UNLESS ALL SIGNATURES COMPLETED

CONTRACT STANDARDS AND DEVELOPMENT UNIT
Office 919-707-6950 FAX 919-250-4119

SEE TITLE BLOCK

ORIGINAL BY: J HOWERTON DATE: 06-22-12
MODIFIED BY: DATE:
CHECKED BY: DATE:
FILE SPEC.:

24-MAY-2017 14:00
S:\Contracts\Contracts\Special Details\jhowerton\Standard Drawings\2012 Standard Drawings\Details in Lieu of Standards\Division 8\862d01 862d03 862d03\862d02.dgn
jhowerton AT CSD-292595