DocuSign Envelope ID: E3C4498E-8A8F-46EE-B67D-513539FC73DD

5/14/99

PROJECT REFERENCE NO.	SHEET NO.
17BP.14.R.118	2C-8

STATE OF
NORTH CAROLINA
DEPT. OF TRANSPORTATION
DIVISION OF HIGHWAYS
RALEIGH, N.C.

ENGLISH DETAIL DRAWING FOR

TYPE III - SHOP CURVED STRUCTURE ANCHOR UNIT

SHEET 1 OF 1

TYPE III SC

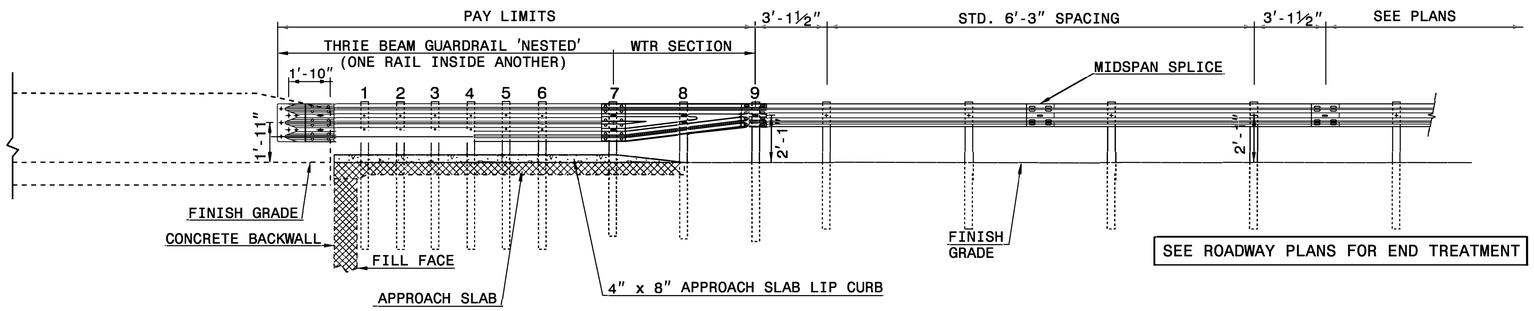

ELEVATION

NOTE:
**POST NOT REQUIRED FOR SKEW ANGLES GREATER THAN 150° OR LESS THAN 30° UNLESS OTHERWISE DIRECTED BY THE ENGINEER.
*THE DISTANCE FROM END OF BRIDGE RAIL TO CENTER LINE OF THE FIRST POST SHOULD BE 11½" IF CONCRETE BACKWALL IS NOT PRESENT.
-SHOULDER BERM GUTTER MUST BE INSTALLED TO THE LIMITS 8" x 4" LIP CURB IS SHOWN IF ANCHOR UNIT IS NOT ADJACENT TO AN APPROACH SLAB.
-MEASURE GUARDRAIL HEIGHT FROM THE TOP OF ADJACENT SURFACE (SHOULDER, BERM, OR GUTTER).
-USE NO STEEL POSTS WITHIN THE GUARDRAIL ANCHOR UNIT LIMITS.
-LAP JOINTS IN THE DIRECTION OF TRAFFIC FLOW.
-SEE STANDARD 862.03 SHEET 4 FOR POST SECTIONS 1 THRU 9.

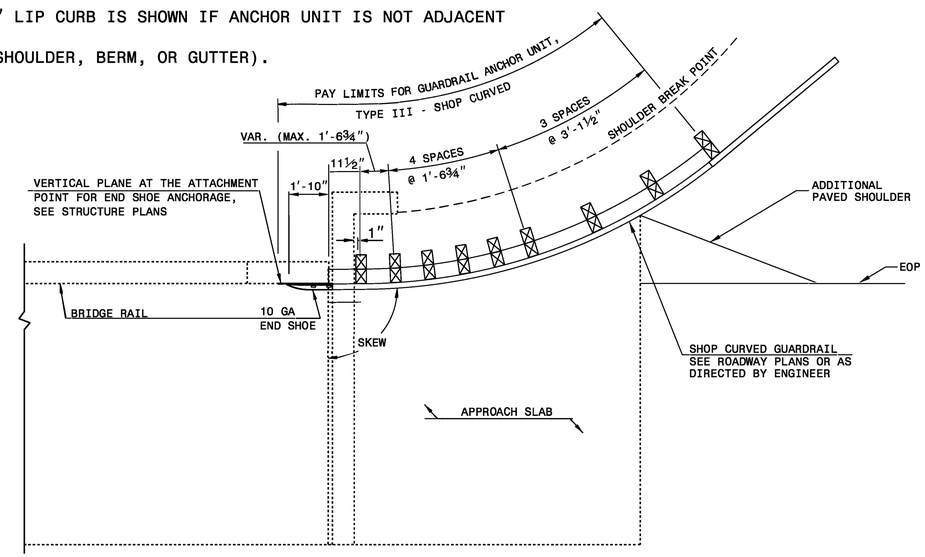

PLAN VIEW

GUARDRAIL ANCHOR UNIT, TYPE III - SHOP CURVED FOR ATTACHMENT TO RAIL ON BRIDGE

STATE OF
NORTH CAROLINA
DEPT. OF TRANSPORTATION
DIVISION OF HIGHWAYS
RALEIGH, N.C.

ENGLISH DETAIL DRAWING FOR

TYPE III - SHOP CURVED STRUCTURE ANCHOR UNIT

SHEET 1 OF 1

TYPE III SC

26-MAY-2017 11:36
S:\Contracts\Contracts\Special Details\ howerton\Guardrail\31 inch Guardrail\type.iii.sc.dgn
jhowerton AT CSD-292595

DOCUMENT NOT CONSIDERED FINAL UNLESS ALL SIGNATURES COMPLETED

NORTH CAROLINA PROFESSIONAL SEAL 022966 ENGINEER
Jason S. Howerton
B73F3D1FDC0D4A9...
9/14/2017

CONTRACT STANDARDS AND DEVELOPMENT UNIT
Office 919-707-6950 FAX 919-250-4119

SEE PLATE FOR TITLE

ORIGINAL BY: E.E.Ward DATE: 4-4-02
MODIFIED BY: T.S.Spell DATE: 5-29-09
CHECKED BY: DATE:
FILE SPEC.: ward:\usr\details\stand\862stds\typeiiisc.dgn